Bosston
A QUALITY PRODUCT

EEM Emergency Push Buttons

EXPLOSIONPROOF

For UL.60079-1 Standard Class I, II Div. 2 Groups C,D,E,F and G

For IEC.60079-0/1 Standard Zone 2

Technical data

Type of Protection: Ex ed IIA T6

Conforming to : Standards IEC 60079-1 or UL 60079-0/1

Marking for test : Ex II2G

Degree of Protection : IP65 acc.To IEC 60529

Ambient Temp. (Ta) : -20°C to+ 55°C Temp.class T5 - T6

Type :EEM

Protection class for UL. : Class I, Division 2 Group.C,D
Class II, Division 1 or 2 Groups.E,F,G
Class III

Protection class for IEC : Zone 2

Conduit hub : 1/2" NPT.

ISO9001:2008

EEM 11 L

Specification:

- Body , Cover : Copper-free aluminium with epoxy - polyyester powder coated.
- Seal gasket : NBR rulber -40° C to + 175° C
- Bolts : Stainless steel

Catalogue Nubmer:

Number of contact	Symbol	Nameplate Marking	Cat.,No. Dead-end (1 hub)
Momentary			
1NC		EMERGENCY STOP	EEM 01
1NO-1NC		EMERGENCY STOP	EEM 11
Push - Lock , Turn - Reset			
1NC		EMERGENCY STOP	EEM 01L
1NO-1NC		EMERGENCY STOP	EEM 11L

Dimensions: (in mm.)

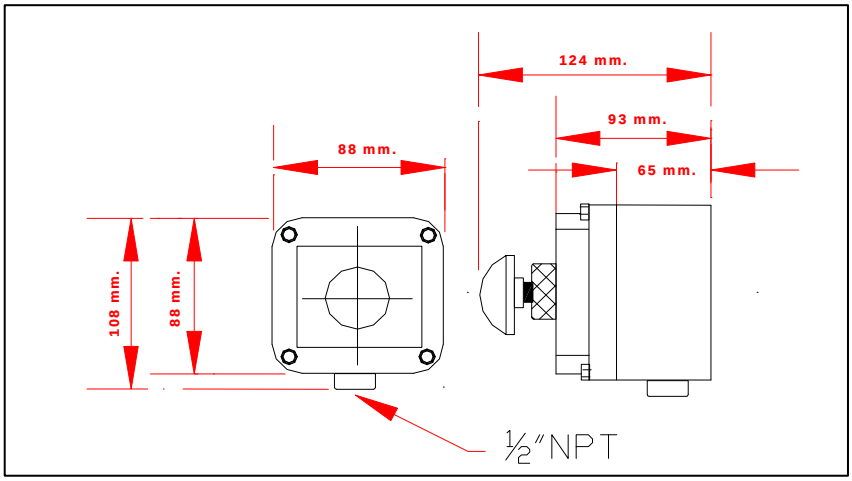

PAS Emergency Control Stations (Break-Glass Type)

Bosston
A QUALITY PRODUCT

EXPLOSIONPROOF

For UL.60079-1 Standard Class I,II Div.1 and 2 Groups C,D,E,F and G

For IEC.60079-1 Standard Zone 1 and Zone 2

ISO9001:2008

Technical data

Type of Protection: Ex d IIA T6

Conforming to : Standards IEC 60079-1 or UL 60079-1

Marking for test : Ex II2G

Degree of Protection : IP66 acc.To IEC 60529

Ambient Temp. (Ta) : -20 °C to+ 55 °C

Type :PAS

Protection class for UL. : Class I, Division1 or 2 Group.C,D
Class II, Division 1 or 2 Groups.E,F,G
Class III

Protection class for IEC : Zone1and Zone 2

Conduit hub : 3/4"x 2 NPT. With Stopping Plug 3/4" x 1

Applications:

The PAS emergency control stations is used for installation at petroleum refineries, chemical plants, storage area where hazardous substances are handled.

as " Break-Glass" fire alarm station, in conjunction with audible and/or visible signaling devices.

indoor or outdoor in damp, wet or corrosive locations.

Features:

- Compact rectangular shape enclosure.
- Three mounting lugs.
- Threaded cover with a glass window.
  Mushroom-head push button, momentary contact.
- Contact rating 3A. 220V.AC. (10A. Rated thermal current).
- Break the glass by hammer to operate push button itself.
- 3/4" inch NPT., dead-end or through-feed conduit hub
- Smooth and well-rounded conduit stop in each hub to protect conductor insulation.

Standard Materials:

- Body and cover - Copper-free aluminium
- Bolts and operating shaft - Stainless steel

Standard Finishes:

- Copper-free aluminium - Epoxy-polyester powder coated.
- Stainless steel - Natural

Dimensions: (in mm.)

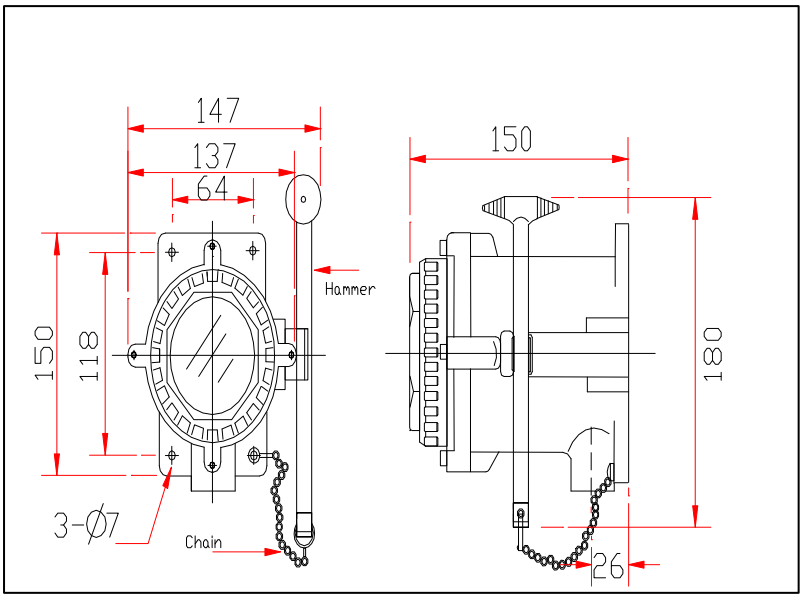

PAS-01

Bosston
A QUALITY PRODUCT

PKS Key Selector Switches

EXPLOSIONPROOF

For UL.60079-1 Standard Class I, II Div. 2 Groups C,D,E,F and G

For IEC.60079-0/1 Standard Zone 2

ISO9001:2008

Technical data

Type of Protection: Ex d IIA T6

Conforming to : Standards IEC 60079-1 or UL 60079-0/1

Marking for test : Ex II2G

Degree of Protection : IP66 acc.To IEC 60529

Ambient Temp. (Ta) : -20°C to+ 55 °C Temp.class T6

Type :SSL

Protection class for UL. : Class I, Division 1, 2 Group.C,D
Class II, Division 1 or 2 Groups.E,F,G
Class III

Protection class for IEC : Zone 1 , 2

Conduit hub : 3/4" NPT.

Features:

- Compact rectanular shape enclosure.
- Two mounting lugs.
- Two or three positions in switching.
- Contact rating 3A. 220V.AC. (10A.Rated thermal current).
- Key operated for special purpose control (2keys supp;ied).
- 3/4 inch NPT, dead-end or through-feed conduit hub
- Smooth and well-rounded conduit stop in each hub tc protect conductor insulation.

Applications:

The SSL key selector switches are suitable for

- use in hazardous areas due to the presence of flammable gases or vapors, combustible dusts or ignitible fibers.
- use in conjunction with magnetic starters or contactors to remote control of motors.
- circuit control selection by key operator.
- indoor and corrosive locations.

Standard Materials:

- Body and cover
- Copper-free aluminium
- Bolts and operating shaft
- Stainless steel

Standard Finishes:

- Copper-free aluminium
- Epoxy-polyester powder coated.
- Stainless steel
- Natural

Catalogue Nubmer:

PKS210S

Number of contact	Symbol Left	Symbol Center	Symbol Right	Nameplate Marking	Cat.,No. Dead-end (1 hub)	Cat.,No. Through-feed (2 hub)
2 - Positions						
1NO		-		OFF - ON	PKS210□	PKS210H□
2 NO		-		OFF - ON	PKS220□	PKS220H□
1NO-1NC		-		MAN. - AUTO	PKS211□	PKS211H□
3 - Positions						
2NO				MAN. - OFF - AUTO.	PKS320✧	PKS320H✧
2NC				Specify	PKS302✧	PKS302H✧

Options:

□ For 2 - positions with spring return, add suffix - *S* to Cat.,No.

✧ For 3 - positions with spring return to center

- Spring return from right, add suffix - *R*
- Spring return from left, add suffix - *L*

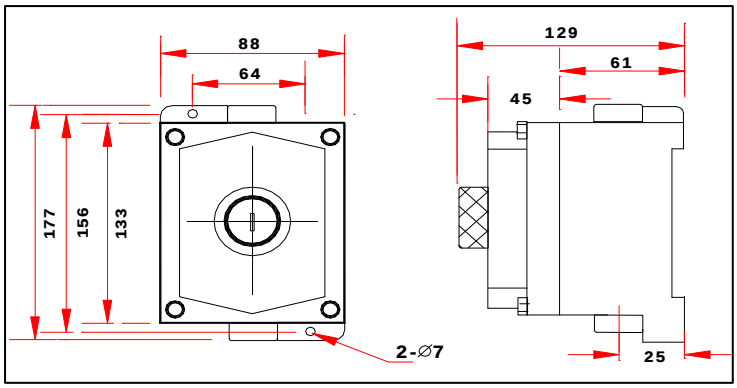

PPBLEM Push Button with Pilot light and Emergency Switch

Bosston
A QUALITY PRODUCT

EXPLOSIONPROOF

For UL.60079-1 Standard Class I, II Div. 2 Groups C,D,E,F and G

For IEC.60079-0/1 Standard Zone 2

ISO9001:2008

Technical data

Type of Protection: Ex d IIA T6

Conforming to : Standards IEC 60079-1 or UL 60079-0/1

Marking for test : Ex II2G

Degree of Protection : IP66 acc.To IEC 60529

Ambient Temp. (Ta) : -20°C to+ 55 °C Temp.class T6

Type :PPBLEM

Protection class for UL. : Class I, Division 1, 2 Group.C,D
Class II, Division 1 or 2 Groups.E,F,G
Class III

Protection class for IEC : Zone 1 , 2

Conduit hub : 3/4" NPT.

Contact rating 3A. 110V.AC - 380V.AC , 12 , 24 V.DC

PPBLEM1-1112G

Catalogue Nubmer:

Number of contact	Symbol	Nameplate Marking	Cat.,No. Through-feed (2 hub)
Single Gang			
1PL + 2 PB(1NO,1NC) + 1 (1NO,1NC) Push - Lock , Turn - Reset		RUN ,START,STOP and EMERGENCY STOP	PPBLEM1 - 1111□✧

Options:

□ Specify operating voltage code for lamp's transformer to Cat.,No.
1 - 110V.AC., 2 - 220V.AC., 3 - 380V.AC.
4 - 12V.DC.., 5 - 24V.DC.

✧ Specify lens colour code to Cat.,No.
R - Red., G - Green, O - Orange,
B - Blue, W - White

Ordering Information:

PPBLEM 1 - 1111 □✧

- **Lens colour (No. of Lamp)**
- **Lamp's Volts**
- **Contact Nc, No**
- **No. of gang**
- **Model**

Dimensions : (in mm.)

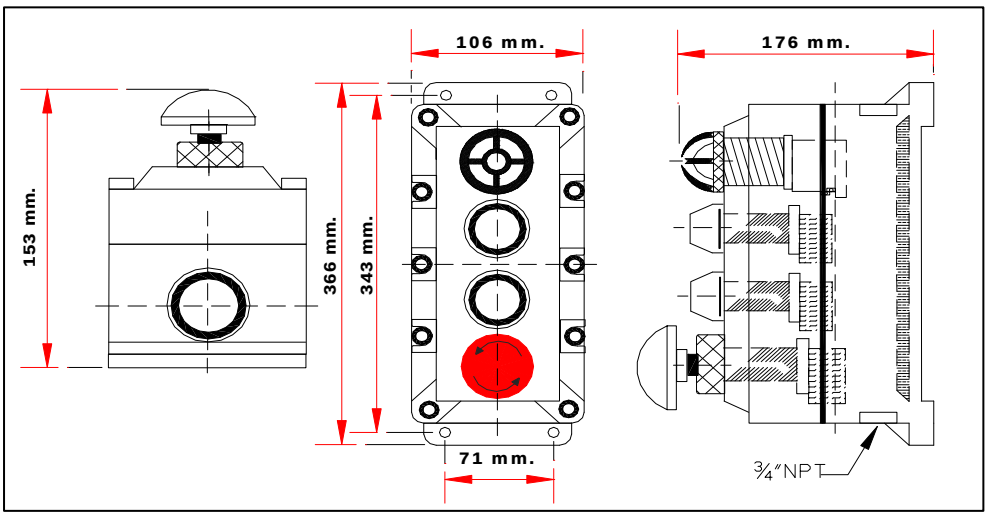

C

DJM Monitor Boxes
For Temperature Controllers

Bosston
A QUALITY PRODUCT

EXPLOSIONPROOF

For UL.60079-1 Standard Class I, II Div. 2 Groups C,D,E,F and G

For IEC.60079-0/1 Standard Zone 2

ISO9001:2008

Technical data

Type of Protection: Ex d IIA T6

Conforming to : Standards IEC 60079-1 or UL 60079-0/1

Marking for test : Ex II2G

Degree of Protection : IP66 acc.To IEC 60529

Ambient Temp. (Ta) : -20°C to+ 55°C Temp.class T6

Type :DJM

Protection class for UL. : Class I, Divition 1, 2 Group.C,D
Class II, Division 1 or 2 Groups.E,F,G
Class III

Protection class for IEC : Zone 1 , 2

Cable Gland : PG9 and PG6

Contact rating 220V.AC.

DJM

Specification

Body,Cover	:	Copper-free aluminium alloy with epoxy-polyester powder coated.
Seal gasket	:	Silicone -40°C to +175°C
Lens	:	Heat and impact resistant glass

Catalogue Nubmer:

Cat. No.	Cabble Gland Outer Diameter (mm.) PG6 + PG9	Dimension in mm. a	b	c	d	e	Approx. Weight (kgs.)
DJM - VD2003	4. - 7 5. - 9	156	88	114	44	157	2

Remark:

In case the enclosures are supplied completely with control units or devices, They will be delivered with conformity certificate and can be used without further testing. supply temperature controllers for VD-2003 series and Vertex brand.
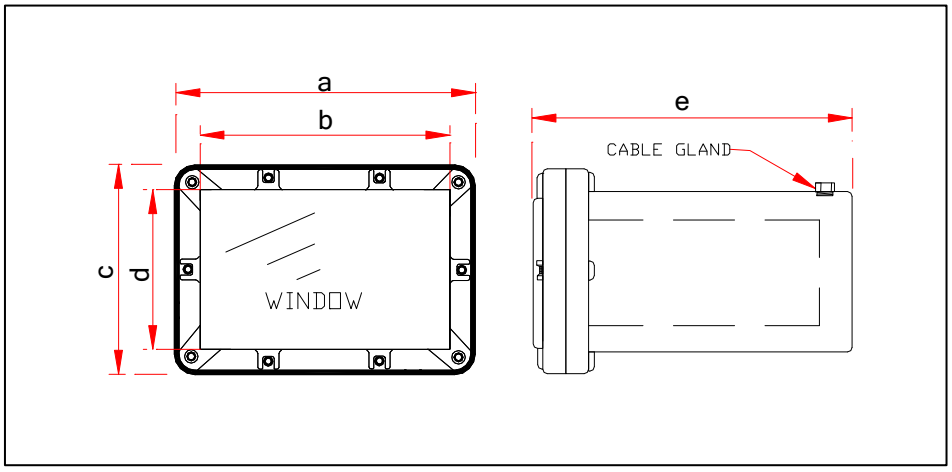
Catalogue Nubmer: